PLATYPUS ANALYTICS

JAR TESTER

DAF TEST ACCESSORIES

1L Jar - 75 x 25 mm Large Radial Paddle

Velocity gradient (G) for the 75 × 25 mm large radial paddle in a 1L square jar, by paddle speed and water temperature.

Speed (rpm)	Velocity Gradient G (s^{-1}) by Water Temperature (°C / °F)															
	0 °C 32 °F	2 °C 35.6 °F	4 °C 39.2 °F	6 °C 42.8 °F	8 °C 46.4 °F	10 °C 50 °F	12 °C 53.6 °F	14 °C 57.2 °F	16 °C 60.8 °F	18 °C 64.4 °F	20 °C 68 °F	22 °C 71.6 °F	24 °C 75.2 °F	26 °C 78.8 °F	28 °C 82.4 °F	30 °C 86 °F
10	4.7	4.9	5.0	5.2	5.4	5.5	5.7	5.8	6.0	6.1	6.3	6.4	6.6	6.7	6.9	7.0
20	13.3	13.8	14.2	14.7	15.2	15.6	16.0	16.5	16.9	17.4	17.8	18.2	18.7	19.1	19.5	19.9
30	24.5	25.3	26.2	27.0	27.8	28.7	29.5	30.3	31.1	31.9	32.7	33.5	34.3	35.1	35.9	36.6
40	37.7	39.0	40.3	41.6	42.9	44.1	45.4	46.6	47.9	49.1	50.4	51.6	52.8	54.0	55.2	56.4
50	52.7	54.5	56.3	58.1	59.9	61.7	63.4	65.2	66.9	68.7	70.4	72.1	73.8	75.5	77.1	78.8
60	69.3	71.7	74.0	76.4	78.8	81.1	83.4	85.7	88.0	90.3	92.5	94.8	97.0	99.2	101.4	103.6
70	87.3	90.3	93.3	96.3	99.2	102.2	105.1	108.0	110.9	113.7	116.6	119.4	122.3	125.0	127.8	130.5
80	106.6	110.3	114.0	117.6	121.3	124.8	128.4	131.9	135.5	139.0	142.4	145.9	149.4	152.7	156.1	159.5
90	127.2	131.7	136.0	140.4	144.7	148.9	153.2	157.4	161.7	165.8	169.9	174.1	178.2	182.2	186.3	190.3
100	149.0	154.2	159.3	164.4	169.5	174.4	179.4	184.4	189.4	194.2	199.0	203.9	208.8	213.4	218.2	222.9
110	171.9	177.9	183.8	189.6	195.5	201.2	207.0	212.7	218.5	224.1	229.6	235.3	240.8	246.2	251.7	257.1
120	195.9	202.7	209.4	216.1	222.8	229.3	235.9	242.4	248.9	255.3	261.6	268.1	274.4	280.6	286.8	293.0
130	220.9	228.6	236.1	243.7	251.2	258.5	265.9	273.3	280.7	287.9	295.0	302.3	309.4	316.4	323.4	330.3
140	246.9	255.4	263.8	272.3	280.7	288.9	297.2	305.4	313.7	321.7	329.7	337.8	345.8	353.6	361.4	369.2
150	273.8	283.3	292.6	302.0	311.3	320.4	329.6	338.7	347.9	356.8	365.7	374.7	383.5	392.1	400.8	409.4
160	301.6	312.1	322.4	332.7	343.0	353.0	363.1	373.2	383.2	393.0	402.8	412.7	422.5	432.0	441.6	451.0
170	330.3	341.8	353.0	364.4	375.6	386.6	397.7	408.7	419.7	430.5	441.2	452.0	462.7	473.1	483.6	494.0
180	359.9	372.4	384.6	397.0	409.2	421.2	433.3	445.3	457.3	469.0	480.7	492.5	504.1	515.4	526.9	538.2
190	390.3	403.8	417.1	430.5	443.8	456.8	469.9	482.9	495.9	508.6	521.3	534.1	546.7	559.0	571.4	583.7
200	421.5	436.1	450.5	465.0	479.3	493.4	507.5	521.5	535.6	549.3	563.0	576.8	590.4	603.7	617.1	630.3

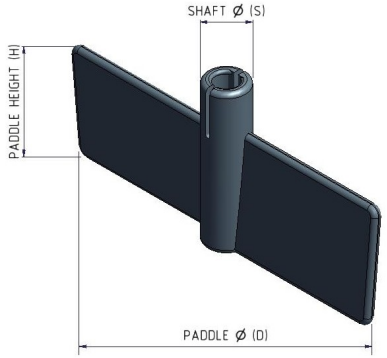

Large radial paddle, 75 × 25 mm

Constants

Parameter	Value
Area of paddle	0.00164 m^2
Paddle diameter	75 mm
Paddle height	25 mm
Shaft diameter	9.4 mm
Tip distance travelled per revolution	0.235619449 m
Relative velocity constant	0.75
Volume	0.001 m^3
Coefficient of drag	1.9

Area excludes the shaft cross-sectional area.

1L Jar - 80 x 35 mm Butterfly Radial Paddle

Velocity gradient (G) for the 80 × 35 mm butterfly radial paddle in a 1L square jar, by paddle speed and water temperature.

Speed (rpm)	Velocity Gradient G (s^{-1}) by Water Temperature (°C / °F)															
	0 °C 32 °F	2 °C 35.6 °F	4 °C 39.2 °F	6 °C 42.8 °F	8 °C 46.4 °F	10 °C 50 °F	12 °C 53.6 °F	14 °C 57.2 °F	16 °C 60.8 °F	18 °C 64.4 °F	20 °C 68 °F	22 °C 71.6 °F	24 °C 75.2 °F	26 °C 78.8 °F	28 °C 82.4 °F	30 °C 86 °F
10	6.4	6.6	6.8	7.0	7.2	7.5	7.7	7.9	8.1	8.3	8.5	8.7	8.9	9.1	9.3	9.5
20	18.0	18.6	19.3	19.9	20.5	21.1	21.7	22.3	22.9	23.5	24.1	24.7	25.2	25.8	26.4	27.0
30	33.1	34.3	35.4	36.5	37.7	38.8	39.9	41.0	42.1	43.2	44.2	45.3	46.4	47.4	48.5	49.5
40	51.0	52.7	54.5	56.2	58.0	59.7	61.4	63.1	64.8	66.4	68.1	69.8	71.4	73.0	74.6	76.2
50	71.2	73.7	76.1	78.6	81.0	83.4	85.8	88.2	90.5	92.8	95.2	97.5	99.8	102.0	104.3	106.5
60	93.7	96.9	100.1	103.3	106.5	109.6	112.8	115.9	119.0	122.1	125.1	128.2	131.2	134.1	137.1	140.1
70	118.0	122.1	126.1	130.2	134.2	138.1	142.1	146.0	150.0	153.8	157.6	161.5	165.3	169.0	172.8	176.5
80	144.2	149.2	154.1	159.1	164.0	168.8	173.6	178.4	183.2	187.9	192.6	197.3	202.0	206.5	211.1	215.6
90	172.1	178.0	183.9	189.8	195.7	201.4	207.2	212.9	218.6	224.2	229.8	235.5	241.0	246.4	251.9	257.3
100	201.5	208.5	215.4	222.3	229.2	235.9	242.6	249.3	256.1	262.6	269.2	275.8	282.3	288.6	295.0	301.4
110	232.5	240.6	248.5	256.5	264.4	272.1	279.9	287.7	295.4	303.0	310.5	318.2	325.7	333.0	340.4	347.7
120	264.9	274.1	283.1	292.2	301.2	310.0	318.9	327.8	336.6	345.2	353.8	362.5	371.1	379.4	387.8	396.1
130	298.7	309.1	319.2	329.5	339.7	349.6	359.6	369.6	379.5	389.3	399.0	408.8	418.4	427.8	437.3	446.7
140	333.8	345.4	356.8	368.2	379.6	390.7	401.9	413.0	424.2	435.0	445.9	456.8	467.6	478.1	488.7	499.2
150	370.2	383.1	395.7	408.4	421.0	433.3	445.7	458.1	470.4	482.4	494.5	506.6	518.6	530.2	542.0	553.6
160	407.8	422.0	435.9	449.9	463.8	477.3	491.0	504.6	518.2	531.5	544.7	558.1	571.3	584.1	597.1	609.9
170	446.7	462.2	477.4	492.7	507.9	522.8	537.8	552.7	567.6	582.1	596.6	611.3	625.7	639.7	654.0	668.0
180	486.7	503.5	520.1	536.8	553.4	569.6	585.9	602.1	618.4	634.2	650.0	666.0	681.7	697.0	712.5	727.8
190	527.8	546.1	564.1	582.2	600.1	617.7	635.4	653.0	670.6	687.8	704.9	722.2	739.3	755.9	772.7	789.3
200	570.0	589.8	609.2	628.7	648.1	667.1	686.2	705.2	724.3	742.8	761.3	780.0	798.4	816.3	834.5	852.4

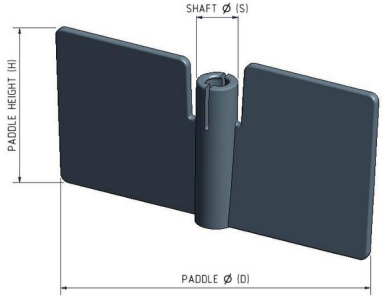

Butterfly radial paddle, 80 × 35 mm

Constants

Parameter	Value
Area of paddle	0.002471 m^2
Paddle diameter	80 mm
Paddle height	35 mm
Shaft diameter	9.4 mm
Tip distance travelled per revolution	0.251327412 m
Relative velocity constant	0.75
Volume	0.001 m^3
Coefficient of drag	1.9

Area excludes the shaft cross-sectional area.

1L Jar - Axial Flow Impeller

Velocity gradient (G) for the axial flow impeller in a 1L square jar, by paddle speed and water temperature.

Speed (rpm)	Velocity Gradient G (s^{-1}) by Water Temperature (°C / °F)															
	0 °C 32 °F	2 °C 35.6 °F	4 °C 39.2 °F	6 °C 42.8 °F	8 °C 46.4 °F	10 °C 50 °F	12 °C 53.6 °F	14 °C 57.2 °F	16 °C 60.8 °F	18 °C 64.4 °F	20 °C 68 °F	22 °C 71.6 °F	24 °C 75.2 °F	26 °C 78.8 °F	28 °C 82.4 °F	30 °C 86 °F
10	2.4	2.5	2.6	2.7	2.8	2.9	2.9	3.0	3.1	3.2	3.3	3.3	3.4	3.5	3.6	3.7
20	6.9	7.1	7.4	7.6	7.9	8.1	8.3	8.5	8.8	9.0	9.2	9.4	9.7	9.9	10.1	10.3
30	12.7	13.1	13.6	14.0	14.4	14.8	15.3	15.7	16.1	16.5	16.9	17.4	17.8	18.2	18.6	19.0
40	19.5	20.2	20.9	21.5	22.2	22.9	23.5	24.2	24.8	25.4	26.1	26.7	27.4	28.0	28.6	29.2
50	27.3	28.2	29.2	30.1	31.0	31.9	32.9	33.8	34.7	35.6	36.4	37.3	38.2	39.1	40.0	40.8
60	35.9	37.1	38.3	39.6	40.8	42.0	43.2	44.4	45.6	46.7	47.9	49.1	50.2	51.4	52.5	53.6
70	45.2	46.8	48.3	49.9	51.4	52.9	54.4	55.9	57.4	58.9	60.4	61.9	63.3	64.7	66.2	67.6
80	55.2	57.1	59.0	60.9	62.8	64.6	66.5	68.3	70.2	72.0	73.8	75.6	77.4	79.1	80.9	82.6
90	65.9	68.2	70.4	72.7	74.9	77.1	79.3	81.5	83.7	85.9	88.0	90.2	92.3	94.4	96.5	98.6
100	77.2	79.9	82.5	85.1	87.8	90.3	92.9	95.5	98.1	100.6	103.1	105.6	108.1	110.5	113.0	115.4
110	89.0	92.1	95.2	98.2	101.3	104.2	107.2	110.2	113.1	116.0	118.9	121.9	124.7	127.5	130.4	133.2
120	101.5	105.0	108.4	111.9	115.4	118.8	122.2	125.5	128.9	132.2	135.5	138.8	142.1	145.3	148.6	151.7
130	114.4	118.4	122.3	126.2	130.1	133.9	137.7	141.5	145.4	149.1	152.8	156.6	160.3	163.9	167.5	171.1
140	127.9	132.3	136.6	141.0	145.4	149.6	153.9	158.2	162.5	166.6	170.8	175.0	179.1	183.1	187.2	191.2
150	141.8	146.7	151.5	156.4	161.2	166.0	170.7	175.4	180.2	184.8	189.4	194.0	198.6	203.1	207.6	212.0
160	156.2	161.6	167.0	172.3	177.6	182.8	188.1	193.3	198.5	203.6	208.6	213.8	218.8	223.7	228.7	233.6
170	171.1	177.0	182.8	188.7	194.5	200.2	206.0	211.7	217.4	222.9	228.5	234.1	239.6	245.0	250.5	255.8
180	186.4	192.9	199.2	205.6	212.0	218.2	224.4	230.6	236.8	242.9	249.0	255.1	261.1	267.0	272.9	278.7
190	202.1	209.2	216.0	223.0	229.9	236.6	243.4	250.1	256.9	263.4	270.0	276.6	283.2	289.5	296.0	302.3
200	218.3	225.9	233.3	240.8	248.2	255.5	262.8	270.1	277.4	284.5	291.6	298.7	305.8	312.7	319.6	326.5

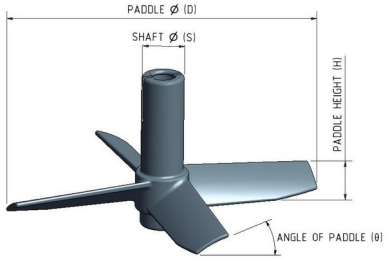

Axial-flow impeller, 70 mm, 4 blades

Constants

Parameter	Value
Area of axial flow impeller	0.00080316 m^2
Blade diameter	70 mm
Blade height	6.9 mm
Shaft diameter	11.8 mm
Number of blades	4
Tip distance travelled per revolution	0.219911486 m
Relative velocity constant	0.75
Volume	0.001 m^3
Blade angle	32 degrees
Coefficient of drag	1.28

Area excludes the shaft cross-sectional area.