PLATYPUS ANALYTICS

JAR TESTER

DAF TEST ACCESSORIES

2L Jar - 60 x 20 mm Small Radial Paddle

Velocity gradient (G) for the 60 × 20 mm small radial paddle in a 2L square jar, by paddle speed and water temperature.

Speed (rpm)	Velocity Gradient G (s^{-1}) by Water Temperature (°C / °F)															
	0 °C 32 °F	2 °C 35.6 °F	4 °C 39.2 °F	6 °C 42.8 °F	8 °C 46.4 °F	10 °C 50 °F	12 °C 53.6 °F	14 °C 57.2 °F	16 °C 60.8 °F	18 °C 64.4 °F	20 °C 68 °F	22 °C 71.6 °F	24 °C 75.2 °F	26 °C 78.8 °F	28 °C 82.4 °F	30 °C 86 °F
10	1.9	1.9	2.0	2.1	2.1	2.2	2.3	2.3	2.4	2.4	2.5	2.6	2.6	2.7	2.7	2.8
20	5.3	5.5	5.7	5.8	6.0	6.2	6.4	6.6	6.7	6.9	7.1	7.2	7.4	7.6	7.8	7.9
30	9.7	10.1	10.4	10.7	11.1	11.4	11.7	12.0	12.4	12.7	13.0	13.3	13.6	13.9	14.2	14.6
40	15.0	15.5	16.0	16.5	17.0	17.5	18.0	18.5	19.0	19.5	20.0	20.5	21.0	21.5	21.9	22.4
50	20.9	21.7	22.4	23.1	23.8	24.5	25.2	25.9	26.6	27.3	28.0	28.7	29.3	30.0	30.7	31.3
60	27.5	28.5	29.4	30.4	31.3	32.2	33.1	34.1	35.0	35.9	36.8	37.7	38.6	39.4	40.3	41.2
70	34.7	35.9	37.1	38.3	39.4	40.6	41.8	42.9	44.1	45.2	46.3	47.5	48.6	49.7	50.8	51.9
80	42.4	43.9	45.3	46.8	48.2	49.6	51.0	52.4	53.9	55.2	56.6	58.0	59.4	60.7	62.1	63.4
90	50.6	52.3	54.1	55.8	57.5	59.2	60.9	62.6	64.3	65.9	67.5	69.2	70.8	72.4	74.0	75.6
100	59.2	61.3	63.3	65.3	67.4	69.3	71.3	73.3	75.3	77.2	79.1	81.1	83.0	84.8	86.7	88.6
110	68.3	70.7	73.0	75.4	77.7	80.0	82.3	84.5	86.8	89.1	91.3	93.5	95.7	97.9	100.1	102.2
120	77.9	80.6	83.2	85.9	88.5	91.1	93.7	96.3	98.9	101.5	104.0	106.6	109.1	111.5	114.0	116.4
130	87.8	90.8	93.8	96.8	99.8	102.8	105.7	108.6	111.6	114.4	117.3	120.1	123.0	125.7	128.5	131.3
140	98.1	101.5	104.9	108.2	111.6	114.8	118.1	121.4	124.7	127.9	131.0	134.3	137.4	140.5	143.7	146.7
150	108.8	112.6	116.3	120.0	123.7	127.4	131.0	134.6	138.3	141.8	145.3	148.9	152.4	155.8	159.3	162.7
160	119.9	124.0	128.1	132.2	136.3	140.3	144.3	148.3	152.3	156.2	160.1	164.0	167.9	171.7	175.5	179.3
170	131.3	135.8	140.3	144.8	149.3	153.7	158.1	162.4	166.8	171.1	175.3	179.7	183.9	188.0	192.2	196.3
180	143.0	148.0	152.9	157.8	162.7	167.4	172.2	177.0	181.8	186.4	191.0	195.7	200.4	204.9	209.4	213.9
190	155.1	160.5	165.8	171.1	176.4	181.6	186.8	191.9	197.1	202.2	207.2	212.3	217.3	222.2	227.1	232.0
200	167.5	173.3	179.1	184.8	190.5	196.1	201.7	207.3	212.9	218.3	223.8	229.3	234.7	239.9	245.3	250.5

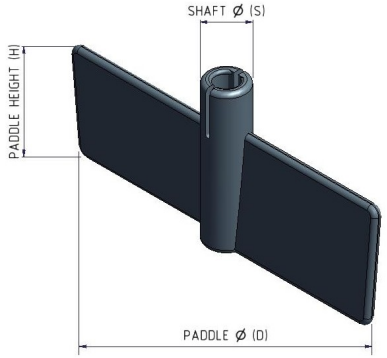

Small radial paddle, 60 × 20 mm

Constants

Parameter	Value
Area of paddle	0.001012 m^2
Paddle diameter	60 mm
Paddle height	20 mm
Shaft diameter	9.4 mm
Tip distance travelled per revolution	0.188495559 m
Relative velocity constant	0.75
Volume	0.002 m^3
Coefficient of drag	1.9

Area excludes the shaft cross-sectional area.

2L Jar - 75 x 25 mm Large Radial Paddle

Velocity gradient (G) for the 75 × 25 mm large radial paddle in a 2L square jar, by paddle speed and water temperature.

Speed (rpm)	Velocity Gradient G (s^{-1}) by Water Temperature (°C / °F)															
	0 °C 32 °F	2 °C 35.6 °F	4 °C 39.2 °F	6 °C 42.8 °F	8 °C 46.4 °F	10 °C 50 °F	12 °C 53.6 °F	14 °C 57.2 °F	16 °C 60.8 °F	18 °C 64.4 °F	20 °C 68 °F	22 °C 71.6 °F	24 °C 75.2 °F	26 °C 78.8 °F	28 °C 82.4 °F	30 °C 86 °F
10	3.3	3.4	3.6	3.7	3.8	3.9	4.0	4.1	4.2	4.3	4.5	4.6	4.7	4.8	4.9	5.0
20	9.4	9.8	10.1	10.4	10.7	11.0	11.3	11.7	12.0	12.3	12.6	12.9	13.2	13.5	13.8	14.1
30	17.3	17.9	18.5	19.1	19.7	20.3	20.8	21.4	22.0	22.6	23.1	23.7	24.3	24.8	25.4	25.9
40	26.7	27.6	28.5	29.4	30.3	31.2	32.1	33.0	33.9	34.7	35.6	36.5	37.3	38.2	39.0	39.9
50	37.3	38.5	39.8	41.1	42.4	43.6	44.9	46.1	47.3	48.6	49.8	51.0	52.2	53.4	54.5	55.7
60	49.0	50.7	52.3	54.0	55.7	57.3	59.0	60.6	62.2	63.8	65.4	67.0	68.6	70.1	71.7	73.2
70	61.7	63.9	66.0	68.1	70.2	72.2	74.3	76.4	78.4	80.4	82.4	84.5	86.5	88.4	90.4	92.3
80	75.4	78.0	80.6	83.2	85.7	88.3	90.8	93.3	95.8	98.3	100.7	103.2	105.6	108.0	110.4	112.8
90	90.0	93.1	96.2	99.2	102.3	105.3	108.3	111.3	114.3	117.2	120.2	123.1	126.0	128.9	131.7	134.5
100	105.4	109.0	112.6	116.2	119.8	123.3	126.9	130.4	133.9	137.3	140.7	144.2	147.6	150.9	154.3	157.6
110	121.6	125.8	129.9	134.1	138.2	142.3	146.4	150.4	154.5	158.4	162.4	166.4	170.3	174.1	178.0	181.8
120	138.5	143.3	148.1	152.8	157.5	162.1	166.8	171.4	176.0	180.5	185.0	189.6	194.0	198.4	202.8	207.2
130	156.2	161.6	166.9	172.3	177.6	182.8	188.0	193.3	198.5	203.5	208.6	213.7	218.8	223.7	228.7	233.6
140	174.6	180.6	186.6	192.5	198.5	204.3	210.2	216.0	221.8	227.5	233.1	238.9	244.5	250.0	255.6	261.0
150	193.6	200.3	206.9	213.5	220.1	226.6	233.1	239.5	246.0	252.3	258.6	264.9	271.2	277.3	283.4	289.5
160	213.3	220.7	227.9	235.2	242.5	249.6	256.8	263.9	271.0	277.9	284.8	291.9	298.7	305.4	312.3	318.9
170	233.6	241.7	249.6	257.6	265.6	273.4	281.2	289.0	296.8	304.4	312.0	319.6	327.2	334.5	342.0	349.3
180	254.5	263.3	272.0	280.7	289.4	297.9	306.4	314.9	323.4	331.6	339.9	348.3	356.5	364.5	372.6	380.6
190	276.0	285.6	295.0	304.4	313.8	323.0	332.3	341.5	350.7	359.6	368.6	377.7	386.6	395.3	404.1	412.7
200	298.0	308.4	318.6	328.8	338.9	348.9	358.8	368.8	378.7	388.4	398.1	407.9	417.5	426.9	436.4	445.7

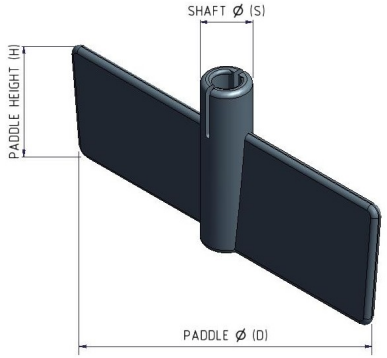

Large radial paddle, 75 × 25 mm

Constants

Parameter	Value
Area of paddle	0.00164 m^2
Paddle diameter	75 mm
Paddle height	25 mm
Shaft diameter	9.4 mm
Tip distance travelled per revolution	0.235619449 m
Relative velocity constant	0.75
Volume	0.002 m^3
Coefficient of drag	1.9

Area excludes the shaft cross-sectional area.

2L Jar - 80 x 35 mm Butterfly Radial Paddle

Velocity gradient (G) for the 80 × 35 mm butterfly radial paddle in a 2L square jar, by paddle speed and water temperature.

Speed (rpm)	Velocity Gradient G (s^{-1}) by Water Temperature (°C / °F)															
	0 °C 32 °F	2 °C 35.6 °F	4 °C 39.2 °F	6 °C 42.8 °F	8 °C 46.4 °F	10 °C 50 °F	12 °C 53.6 °F	14 °C 57.2 °F	16 °C 60.8 °F	18 °C 64.4 °F	20 °C 68 °F	22 °C 71.6 °F	24 °C 75.2 °F	26 °C 78.8 °F	28 °C 82.4 °F	30 °C 86 °F
10	4.5	4.7	4.8	5.0	5.1	5.3	5.4	5.6	5.7	5.9	6.0	6.2	6.3	6.5	6.6	6.7
20	12.7	13.2	13.6	14.1	14.5	14.9	15.3	15.8	16.2	16.6	17.0	17.4	17.9	18.3	18.7	19.1
30	23.4	24.2	25.0	25.8	26.6	27.4	28.2	29.0	29.8	30.5	31.3	32.0	32.8	33.5	34.3	35.0
40	36.0	37.3	38.5	39.8	41.0	42.2	43.4	44.6	45.8	47.0	48.1	49.3	50.5	51.6	52.8	53.9
50	50.4	52.1	53.8	55.6	57.3	59.0	60.7	62.3	64.0	65.7	67.3	68.9	70.6	72.2	73.8	75.3
60	66.2	68.5	70.8	73.1	75.3	77.5	79.7	81.9	84.2	86.3	88.5	90.6	92.8	94.9	97.0	99.0
70	83.5	86.4	89.2	92.1	94.9	97.7	100.5	103.3	106.0	108.8	111.5	114.2	116.9	119.5	122.2	124.8
80	102.0	105.5	109.0	112.5	115.9	119.3	122.8	126.2	129.6	132.9	136.2	139.5	142.8	146.0	149.3	152.5
90	121.7	125.9	130.0	134.2	138.3	142.4	146.5	150.5	154.6	158.5	162.5	166.5	170.4	174.3	178.1	181.9
100	142.5	147.4	152.3	157.2	162.0	166.8	171.6	176.3	181.1	185.7	190.3	195.0	199.6	204.1	208.6	213.1
110	164.4	170.1	175.7	181.3	186.9	192.4	197.9	203.4	208.9	214.2	219.6	225.0	230.3	235.5	240.7	245.8
120	187.3	193.8	200.2	206.6	213.0	219.2	225.5	231.8	238.0	244.1	250.2	256.3	262.4	268.3	274.3	280.1
130	211.2	218.5	225.7	233.0	240.2	247.2	254.3	261.3	268.4	275.2	282.1	289.0	295.9	302.5	309.2	315.9
140	236.0	244.2	252.3	260.4	268.4	276.3	284.2	292.1	299.9	307.6	315.3	323.0	330.7	338.1	345.6	353.0
150	261.8	270.9	279.8	288.8	297.7	306.4	315.2	323.9	332.6	341.1	349.6	358.2	366.7	374.9	383.3	391.5
160	288.4	298.4	308.2	318.1	327.9	337.5	347.2	356.8	366.4	375.8	385.2	394.7	404.0	413.0	422.2	431.3
170	315.8	326.8	337.6	348.4	359.2	369.7	380.3	390.8	401.3	411.6	421.9	432.2	442.4	452.4	462.4	472.3
180	344.1	356.1	367.8	379.6	391.3	402.8	414.3	425.8	437.3	448.4	459.6	470.9	482.0	492.9	503.8	514.6
190	373.2	386.1	398.9	411.7	424.4	436.8	449.3	461.7	474.2	486.3	498.4	510.7	522.8	534.5	546.4	558.1
200	403.0	417.0	430.8	444.6	458.3	471.7	485.2	498.7	512.1	525.2	538.3	551.6	564.6	577.2	590.1	602.7

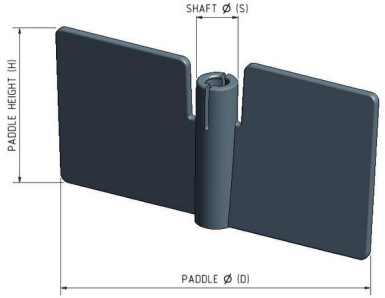

Butterfly radial paddle, 80 × 35 mm

Constants

Parameter	Value
Area of paddle	0.002471 m^2
Paddle diameter	80 mm
Paddle height	35 mm
Shaft diameter	9.4 mm
Tip distance travelled per revolution	0.251327412 m
Relative velocity constant	0.75
Volume	0.002 m^3
Coefficient of drag	1.9

Area excludes the shaft cross-sectional area.

2L Jar - Axial Flow Impeller

Velocity gradient (G) for the axial flow impeller in a 2L square jar, by paddle speed and water temperature.

Speed (rpm)	Velocity Gradient G (s^{-1}) by Water Temperature (°C / °F)															
	0 °C 32 °F	2 °C 35.6 °F	4 °C 39.2 °F	6 °C 42.8 °F	8 °C 46.4 °F	10 °C 50 °F	12 °C 53.6 °F	14 °C 57.2 °F	16 °C 60.8 °F	18 °C 64.4 °F	20 °C 68 °F	22 °C 71.6 °F	24 °C 75.2 °F	26 °C 78.8 °F	28 °C 82.4 °F	30 °C 86 °F
10	1.7	1.8	1.8	1.9	2.0	2.0	2.1	2.1	2.2	2.2	2.3	2.4	2.4	2.5	2.5	2.6
20	4.9	5.1	5.2	5.4	5.6	5.7	5.9	6.0	6.2	6.4	6.5	6.7	6.8	7.0	7.1	7.3
30	9.0	9.3	9.6	9.9	10.2	10.5	10.8	11.1	11.4	11.7	12.0	12.3	12.6	12.8	13.1	13.4
40	13.8	14.3	14.8	15.2	15.7	16.2	16.6	17.1	17.5	18.0	18.4	18.9	19.3	19.8	20.2	20.6
50	19.3	20.0	20.6	21.3	21.9	22.6	23.2	23.9	24.5	25.1	25.8	26.4	27.0	27.6	28.3	28.9
60	25.4	26.2	27.1	28.0	28.8	29.7	30.5	31.4	32.2	33.1	33.9	34.7	35.5	36.3	37.1	37.9
70	32.0	33.1	34.2	35.3	36.3	37.4	38.5	39.5	40.6	41.7	42.7	43.7	44.8	45.8	46.8	47.8
80	39.1	40.4	41.7	43.1	44.4	45.7	47.0	48.3	49.6	50.9	52.2	53.4	54.7	55.9	57.2	58.4
90	46.6	48.2	49.8	51.4	53.0	54.5	56.1	57.7	59.2	60.7	62.2	63.8	65.3	66.7	68.2	69.7
100	54.6	56.5	58.3	60.2	62.1	63.9	65.7	67.5	69.3	71.1	72.9	74.7	76.5	78.2	79.9	81.6
110	63.0	65.1	67.3	69.5	71.6	73.7	75.8	77.9	80.0	82.1	84.1	86.2	88.2	90.2	92.2	94.2
120	71.7	74.2	76.7	79.1	81.6	84.0	86.4	88.8	91.2	93.5	95.8	98.2	100.5	102.8	105.0	107.3
130	80.9	83.7	86.5	89.2	92.0	94.7	97.4	100.1	102.8	105.4	108.0	110.7	113.3	115.9	118.4	121.0
140	90.4	93.5	96.6	99.7	102.8	105.8	108.8	111.9	114.9	117.8	120.8	123.7	126.6	129.5	132.4	135.2
150	100.3	103.7	107.2	110.6	114.0	117.3	120.7	124.1	127.4	130.7	133.9	137.2	140.5	143.6	146.8	149.9
160	110.5	114.3	118.1	121.8	125.6	129.3	133.0	136.7	140.4	143.9	147.5	151.2	154.7	158.2	161.7	165.2
170	121.0	125.2	129.3	133.4	137.6	141.6	145.6	149.7	153.7	157.6	161.6	165.5	169.5	173.3	177.1	180.9
180	131.8	136.4	140.9	145.4	149.9	154.3	158.7	163.1	167.5	171.8	176.0	180.4	184.6	188.8	193.0	197.1
190	142.9	147.9	152.8	157.7	162.5	167.3	172.1	176.9	181.6	186.3	190.9	195.6	200.2	204.7	209.3	213.8
200	154.4	159.7	165.0	170.3	175.5	180.7	185.9	191.0	196.1	201.2	206.2	211.2	216.2	221.1	226.0	230.8

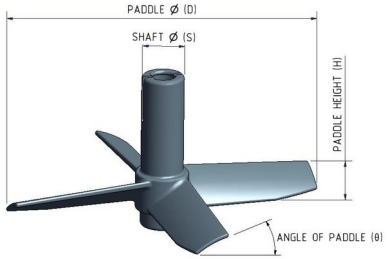

Axial-flow impeller, 70 mm, 4 blades

Constants

Parameter	Value
Area of axial flow impeller	0.00080316 m^2
Blade diameter	70 mm
Blade height	6.9 mm
Shaft diameter	11.8 mm
Number of blades	4
Tip distance travelled per revolution	0.219911486 m
Relative velocity constant	0.75
Volume	0.002 m^3
Blade angle	32 degrees
Coefficient of drag	1.28

Area excludes the shaft cross-sectional area.